INTEGRATED DEVICES & PHOTONICS

Senior/graduate & Advanced graduate courses in EE

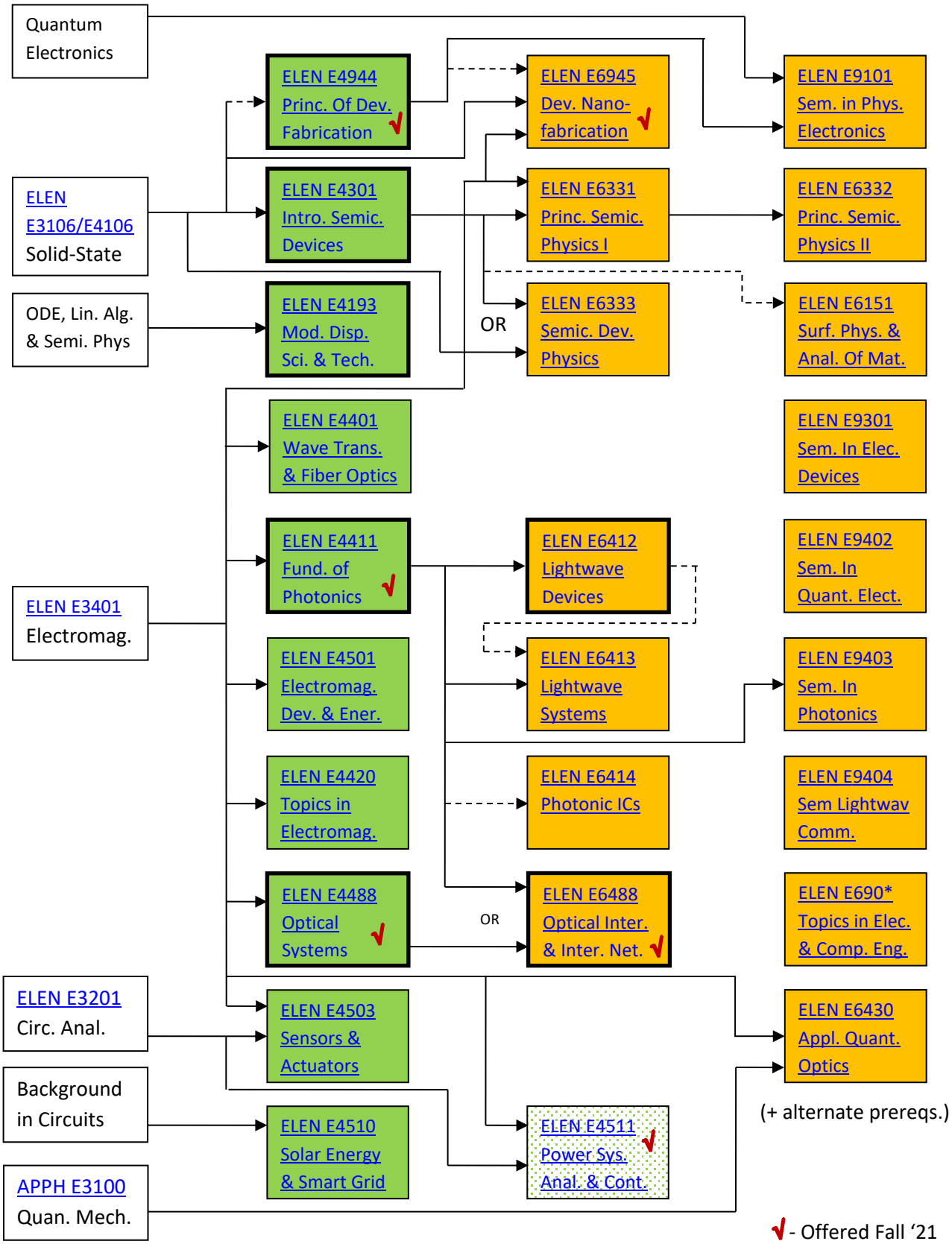

Green = Senior/grad; Orange = Advanced graduate; Bold border = offered regularly;

Dotted lines = recommended preparation; Updated June 2021

Recent related topics courses: ELEN E6905 Topic: Computational Photonics & Quatum Electronics (*Fall '17*)

ELEN E6906 Topic: Low-Dimensional Nanoelectronics (*Spring '15*)

ELEN E6907 Topic: Emerging Nanoelectronic Devices (*Fall '19, '13-'17*)

ELEN E9301 Topic: Theory & Practice of Device Scaling (*Spring '17*)